⊕ ø38X22bore <For eject hole or Retract hole>

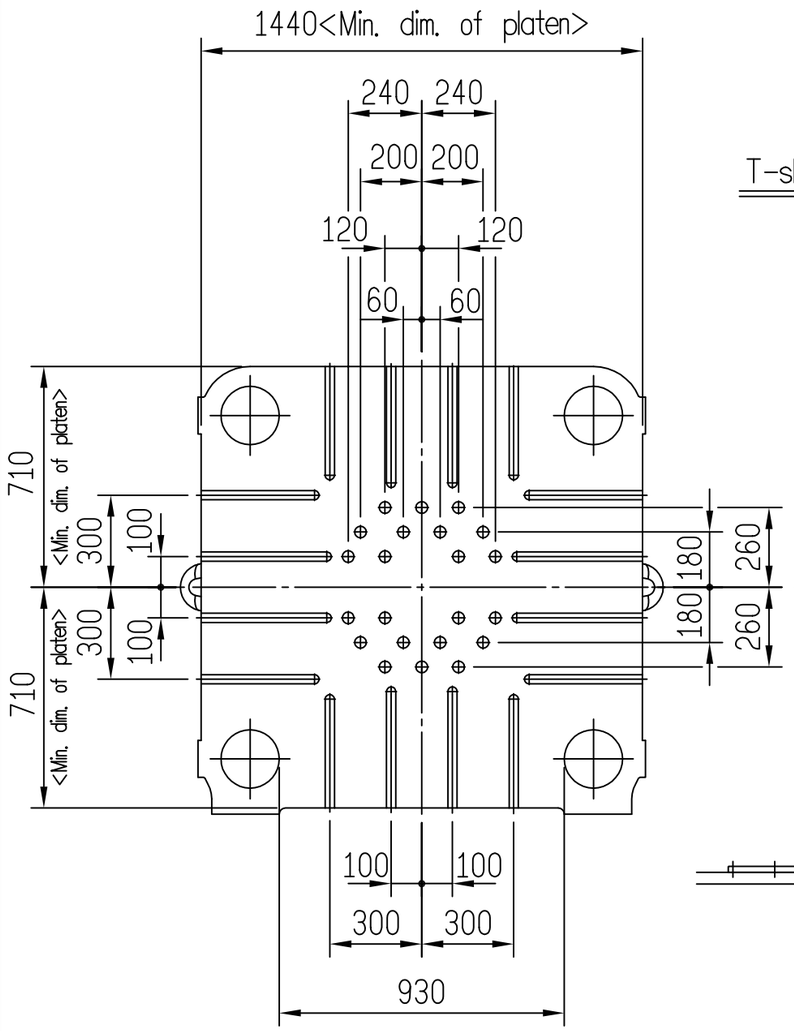

"A-A" Sectional area

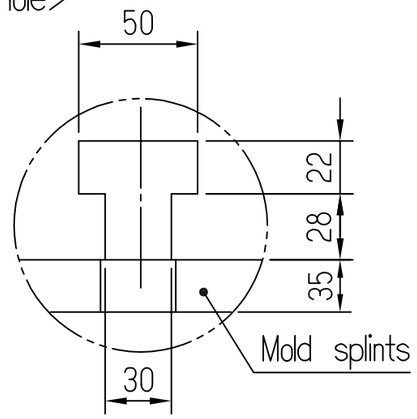

T-slot, "D" detailed diagram

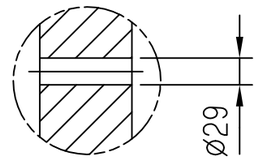

"E-E" Sectional area

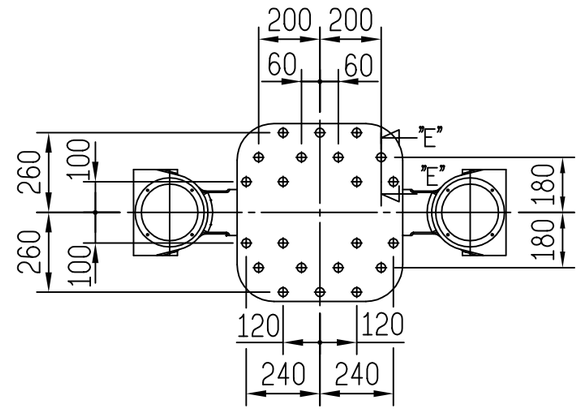

Retract hole position
"C-C" Sectional area

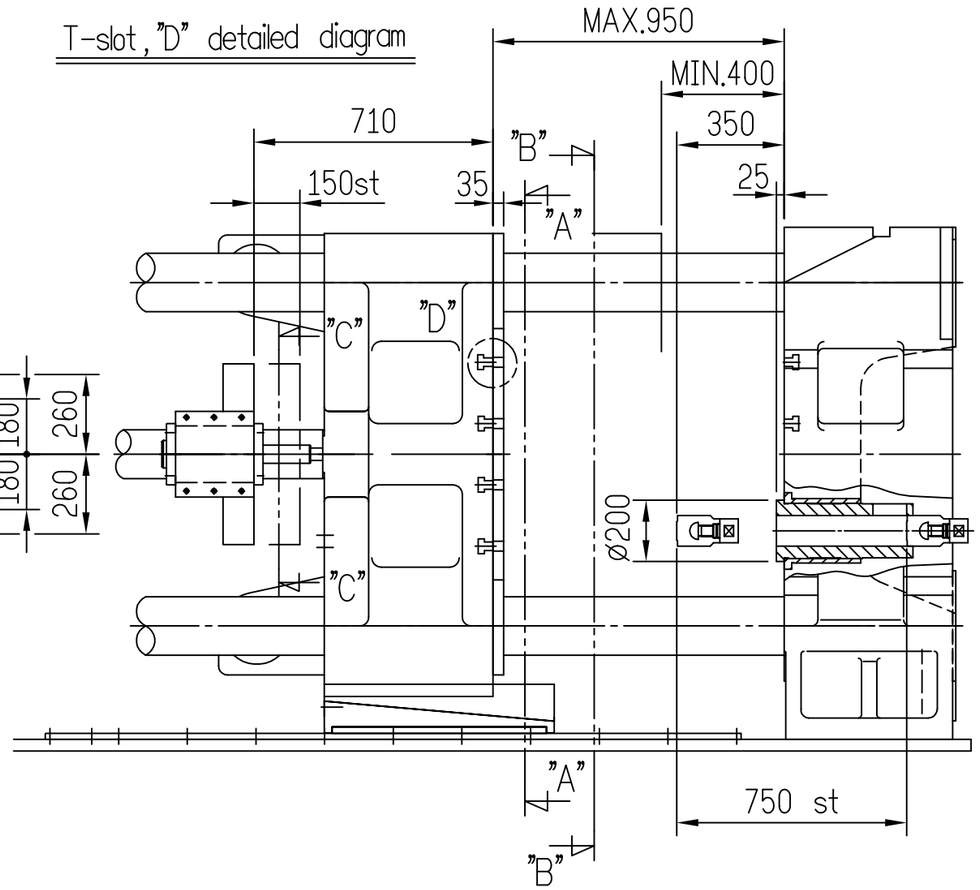

"F" is -70, -250, -320

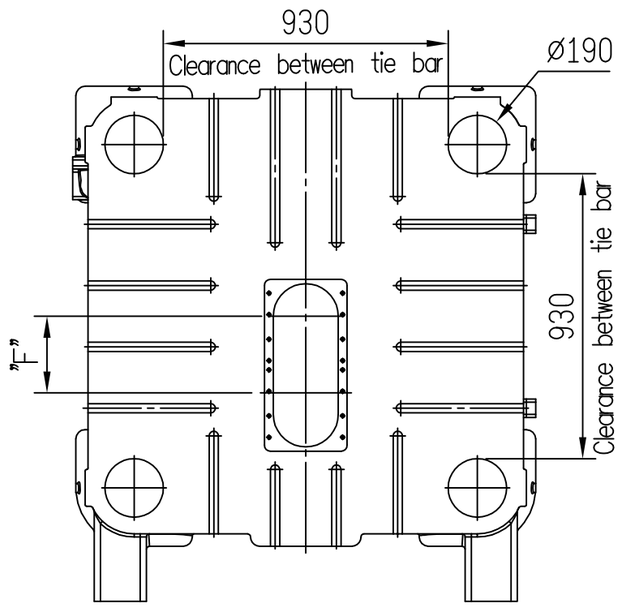

"B-B" Sectional area

Re:<01>Old generation-retracting hole is 30 pieces , new generation is 22 pieces that less 8 pieces compare to old one.

ZITAI	鋁台精機廠股份有限公司 ZITAI-PRECISION MACHINERY CO., LTD	MODEL	ZDC-900T	No.	Q1VPDEA131	Applied sect	Die platen ejection drawing